OBSERVANT™
A JAIN IRRIGATION COMPANY

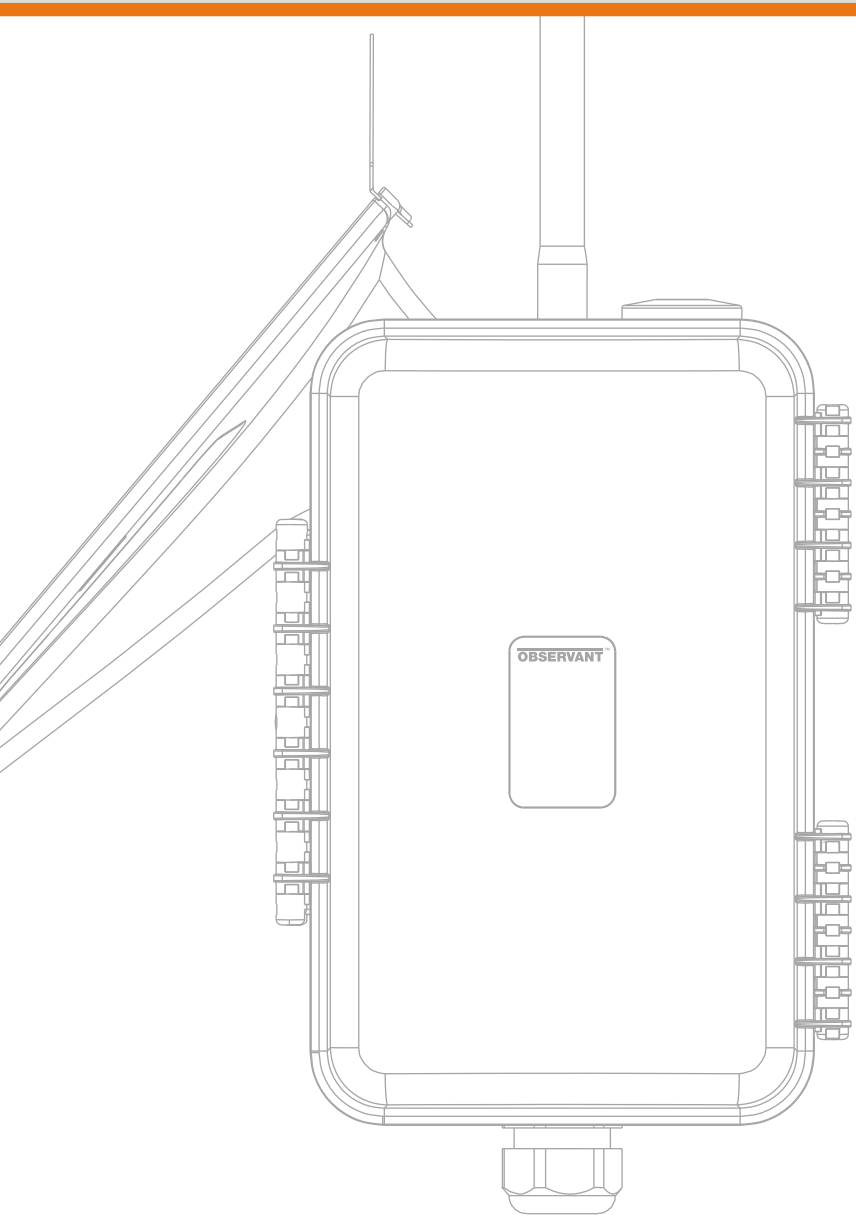

C3 USER GUIDE

Published in the United States by Jain Irrigation, Inc.
2851 East Florence Ave
Fresno, CA 93721
USA
Phone: (559) 485-7171
Website: jainsusa.com

Published in Australia by Jain Agriculture Services Australia Pty Ltd
77 Argyle Street
Fitzroy VIC 3065
Australia
Phone: 1300 224 688 (+61 3 8415 0288 international)
E-mail: info@observant.net
Website: observant.net

© Jain Irrigation 2021

No part of this document may be reproduced or communicated to a third party without prior written consent of the copyright holder.

This user guide is not legally binding. Please refer to the Terms and Conditions of Sale for any binding commitments and agreements between Jain and the end user in regard to Jain products.

The contents of this guide are subject to change without notice.

OBS-USR-M001 R7

Contents

1. General Information **8**
About this guide 8
Regulatory compliance 8

2. Overview **10**
Description 10
C3 Module 11
Components 11
Electrical specifications 13
Mechanical specifications 14
Product codes 15
C3 Solar Enclosure 16
Components 16
Electrical specifications 18
Mechanical specifications 18
Product codes 19

3. Installation **21**
Preparation 21
Location 21
Mounting posts 21
Pre-cabling 22
Unpacking 22
C3 Solar Enclosure installation 22
Mounting bracket 22
Primary antenna mounting 26
C3 Module Installation 27

4. Appendix **30**
A1. Electrical connections 30
Dual purpose digital/analog inputs (x4) 31
Dual purpose switched outputs (x4) 32
RS232/SDI port 33
RS485 ports (x2) 33
Power connections (x3) 34
USB port 34
SIM card 34
RF antenna connections (x4) 35
A2. User interface reference 35
Indicator keys 35
Power/User touch button 39
Pinhole reset button 39
A3. Solar Enclosure panel orientation 39
A4. Physical dimensions 41

List of Figures

Figure 1. C3 Front Components 11
Figure 2. C3 Rear Components 12
Figure 3. Solar Enclosure Outer Components 16
Figure 4. Solar Enclosure Inner Components 17
Figure 5. C3 Installed in Solar Enclosure 20
Figure 6. Ideal Hose Clamp length 22
Figure 7. Installed Mounting Bracket 23
Figure 8. Optional Rear Entry Cable Glands 25
Figure 9. Installing Enclosure on Mounting Bracket 26
Figure 10. Primary Antenna Installation 27
Figure 11. C3 Module Mounting 28
Figure 12. Bird Deterrent Mounting 29
Figure 13. Solar Panel Angle Setting 40
Figure 14. Dimensions of Mounted Solar Enclosure 41
Figure 15. C3 Dimensions 42

List of Tables

Table 1. Connections to Inputs 1 and 2 31
Table 2. Connections to Inputs 3 and 4 31
Table 3. Connections to Outputs 1 and 2 32
Table 4. Connections to Outputs 3 and 4 32
Table 5. RS232/SDI12 Port Connections 33
Table 6. RS485 Port 1 Connections 33
Table 7. RS485 Port 2 Connections 33
Table 8. Power Terminal Connections 34
Table 9. DC Power-Jack Connections 34
Table 10. RF Connections 35
Table 11. Battery Status Indicator 36
Table 12. Radio Indicator LED 36
Table 13. Input Port Indicators 37
Table 14. Output Port Indicators 37
Table 15. RS485 and RS232 Port Indicators 37
Table 16. USB Port Indicator 38
Table 17. Power Port and DC-Jack Indicator 38

1. General Information

About this guide

This document provides information on the features, installation, and typical usage of the C3 remote monitoring and control platform. More specific information on associated third-party devices and Observant Global services can be found in the relevant product guides and via the Observant website.

Regulatory compliance

The following describes relevant approvals and certifications for the C3 product and it's variants. Please note any modifications to the equipment as supplied not expressly approved by Observant could void the user's authority to operate the equipment by invalidating all applicable regulatory approvals and certifications.

Australia

The C3 is approved for use through the RCM mark.
The C3+ complies with AS/NZS CISPR 32.

USA

This device complies with Part 15 of the FCC Rules. Operation is subject to the following two conditions: (1) this device may not cause harmful interference, and (2) this device must accept any interference received, including interference that may cause undesired operation.

This product contains FCC IDs according to the following model designators:

- C3-G: VW3HILO3G.
- C3-900: KQLAC4490.
- C3-Q: QIPPXS8.
- C3-L: MCQ-XB3M1, XPY2AGQN4NNN

This equipment generates/uses radio frequency energy and there is no guarantee that interference with other equipment in a given installation will not occur. If this equipment does cause harmful interference to other radio frequency equipment the user may be able to correct the interference via the following measures:

- Reorient or relocate the unit.
- Increase the separation between the unit an the equipment in question.
- Consult an experienced RF technician for assistance.

Other

This product complies with the European RoHS directive 2002/95/EC.

2. Overview

Description

The C3 is a robust remote monitoring and control platform designed for deployment in rugged environments. The C3 platform consists of two main components: an electronic/battery/radio module [C3] and an optional, protective, outdoor enclosure complete with integrated, photovoltaic, power supply [C3 Solar Enclosure].

The C3 can be deployed on its own or it can be in situations where power and environmental protection are already offered, else it can be paired with the Solar Enclosure, resulting in a fully self-contained and stand-alone solution. The C3 is available factory configured with a number of different radio-frequency, communication-technology options, allowing a tailored solution to make the best use of wireless coverage where available and to minimize transmission costs in all situations. Along with Observant's own suite of sensing and control equipment, the C3 can be connected to a wide range of standard sensors. Additionally, wide-ranging support for specific third party products exists and can be added as demand requires.

When combined with an Observant Global™ subscription, the C3 becomes a very powerful remote-management tool, allowing alerts, data history, and equipment-control services to be delivered to the digital devices of your choice.

C3 Module

Components

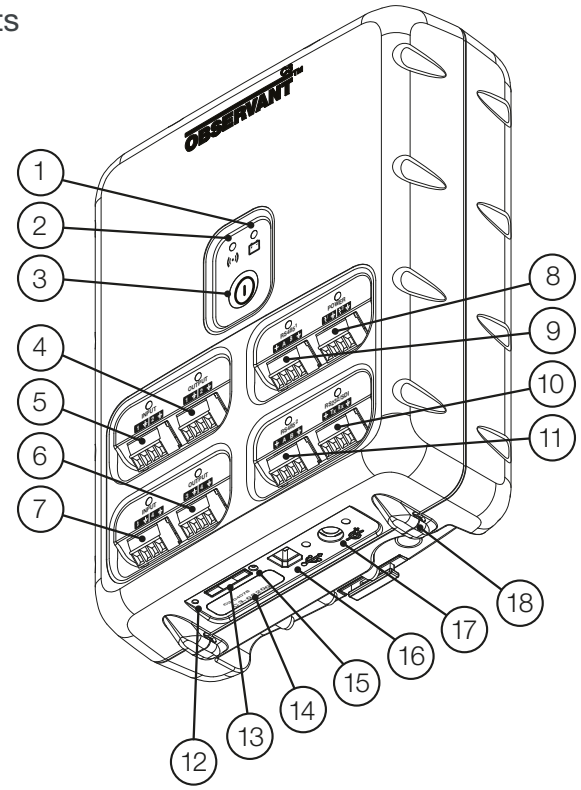

1. Battery status indicator.
2. Radio status indicator.
3. Power/User touch-button.
4. Output connector + indicator.
5. Connector for Outputs 1 and 2.
6. Connector for Outputs 3 and 4.
7. Input connector + indicator.
8. Power connector + indicator.
9. RS485[1] connector + indicator.
10. RS232/SDI12 connector + indicator.
11. RS485[2] connector + indicator.
12. Pinhole, reset button.
13. SIM card slot.
14. Serial Number/Address label.
15. SIM card ejection button.
16. USB connector + indicator.
17. DC power jack + indicator.
18. Cable tie mount (x2).

Figure 1. C3 Front Components

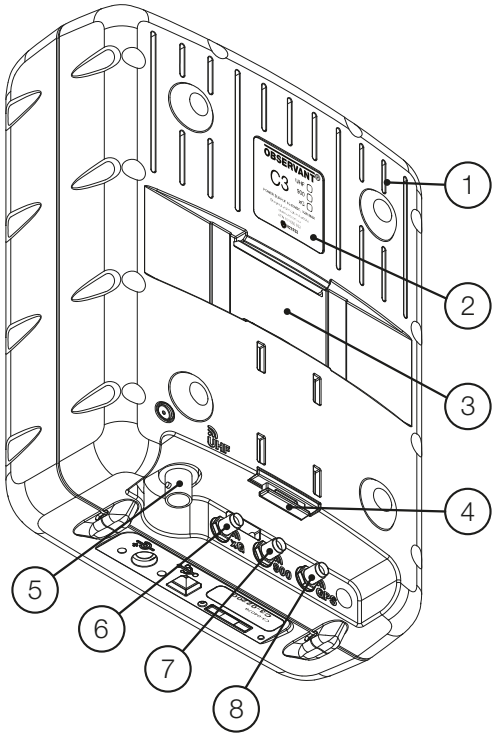

1. Ventilation slots.
2. Information label.
3. DIN rail mount.
4. DIN rail mount release tab.
5. UHF, BNC, antenna connector (Australia only).
6. xG, SMA, antenna connector.
7. 900 MHz, SMA, antenna connector.
8. GPS, SMA, antenna connector.

Figure 2. C3 Rear Components

Electrical specifications

Power requirements

- Connection via 4-way, 0.15” pitch, pluggable, screw-terminal block.
- 60 V maximum for all power inputs.
- 40 W peak total power draw across all inputs.
- 100-500 mW typical draw depending upon radio technology and mode.

Battery

- 75 Whr total capacity.
- $LiFePO_4$ (Lithium ferrous phosphate) technology.
- 7-10 year design life.

Wireless technology

- GPS is provided with all models.
- Optional 915 MHz, spread-spectrum, 1 W, data radio.
- Optional GSM/3G, 850 MHz, cell-packet radio (discontinued).
- Optional 470 MHz, 5 W, UHF, data radio (Australia only).
- Optional Cellular LTE CAT-M1/NB-IoT Smart Modem.

IO connections

- 4 x Digital inputs (with 0-10 V, analog-sensing mode).
- 4 x Digital power outputs (with 4-20 mA, analog-sensing mode).
- 3 x Sensor power outputs.
- 2 x RS485, serial-communication ports.
- 1 x Dual-purpose, RS232/SDI-12, serial-communication ports.
- USB slave (Type B).

Mechanical specifications

Enclosure

- Primary material: ABS plastic.
- IP rating: 41.

Dimensions

Module only:

	Imperial Units	Metric Units
Height	8.46"	215 mm
Width	6.46"	164 mm
Depth	2.95"	75 mm

Packaged for shipment:

	Imperial Units	Metric Units
Height	4.72"	120 mm
Width	9.45"	240 mm
Depth	7.09"	180 mm

Weight

- Module alone (varies with radio configuration): 2.9-3.7 lb (1.3-1.7 kg).
- Module packaged for shipment: 4.6 lb (2.1 kg).

Mounting

- Standard 32 mm DIN rail (Figure 2, Item 3).
- Locking clip (Figure 2, Item 4).

Cable management

- Connections via 4-way, 0.15” pitch, pluggable, screw-terminal block.
- Two cable-tie mount points (Figure 1, Item 13).

Product codes

Telemetry Modules

- C3-M-G [10021]: C3 with cellular connection.
- C3-M-U [10024]: C3 with UHF local radio (Australia only).
- C3-M-900 [10022]: C3 with 900Mhz local radio.
- C3-M-G900 [10023]: C3 with cellular connection and 900Mhz local radio.
- C3-M-GU [10025]: C3 with cellular connection and UHF local radio. (Australia only).
- C3-MA-900 [01229]: C3 module with 900MHz local radio and actuator cable.
- C3-MA-G900 [01227]: C3 module with cellular connection, 900Mhz local radio and actuator cable.
- C3-MA-L900 [10580]: C3 with cellular LTE-M/NB-IoT and 900MHz local radio.
- C3-M-LU [10583]: C3 module with cellular LTE-M/NB-IoT and UHF local radio. (Australia only).

Cables and antenna

- PWR-C [00012]: 240 VAC/12 VDC, 40 w, in-line, switching power supply.
- DTC [00774]: 6 m extension cable to connect a RS485 device (terminated with a 4-way, Switchcraft, male plug and a 4-way, 0.15” pitch, pluggable, screw-terminal block.
- DCE [00026]: 10 m RS485 device extension cable (4-way switchcraft M/F).
- DTB [00174]: 60 cm RS485 device tail (4-way switchcraft female to bare ends).
- AK-TRI-D3 [00704]: Tri-band puck style antenna with 3 m cable for GSM/3G/GPS reception when installed without integrated solar enclosure (see ‘C3 solar enclosure’ section for additional antenna options).

C3 Solar Enclosure

Components

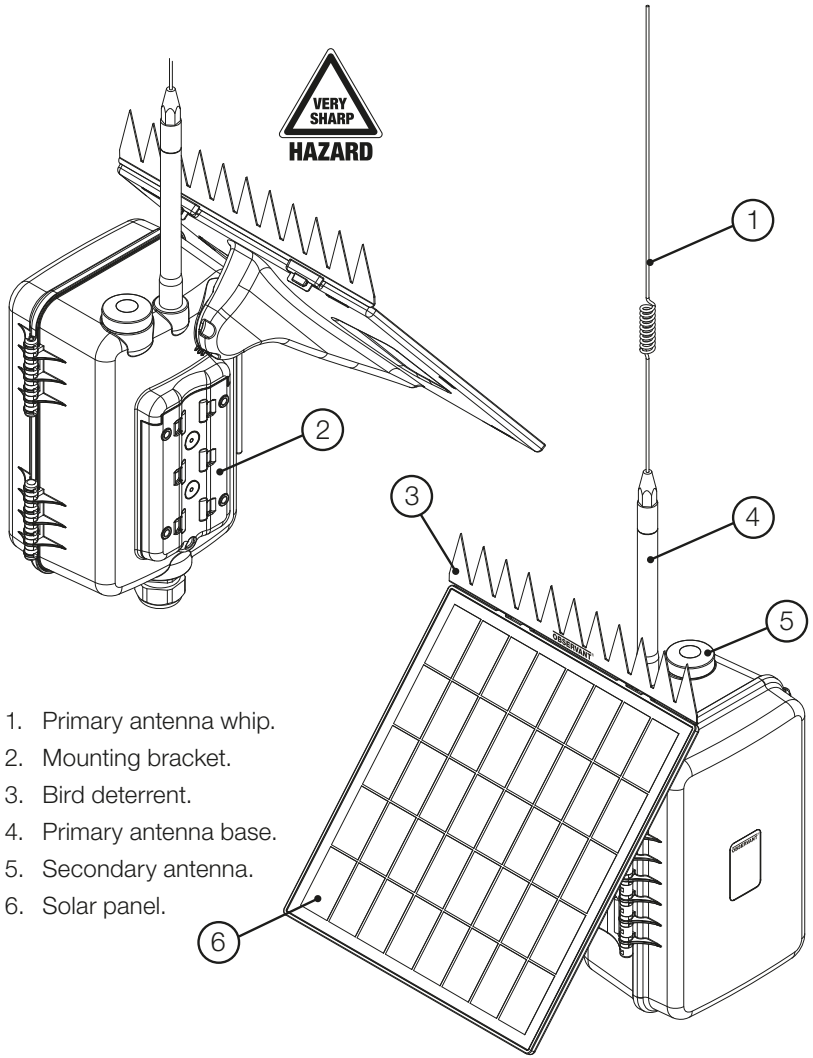

1. Primary antenna whip.
2. Mounting bracket.
3. Bird deterrent.
4. Primary antenna base.
5. Secondary antenna.
6. Solar panel.

Figure 3. Solar Enclosure Outer Components

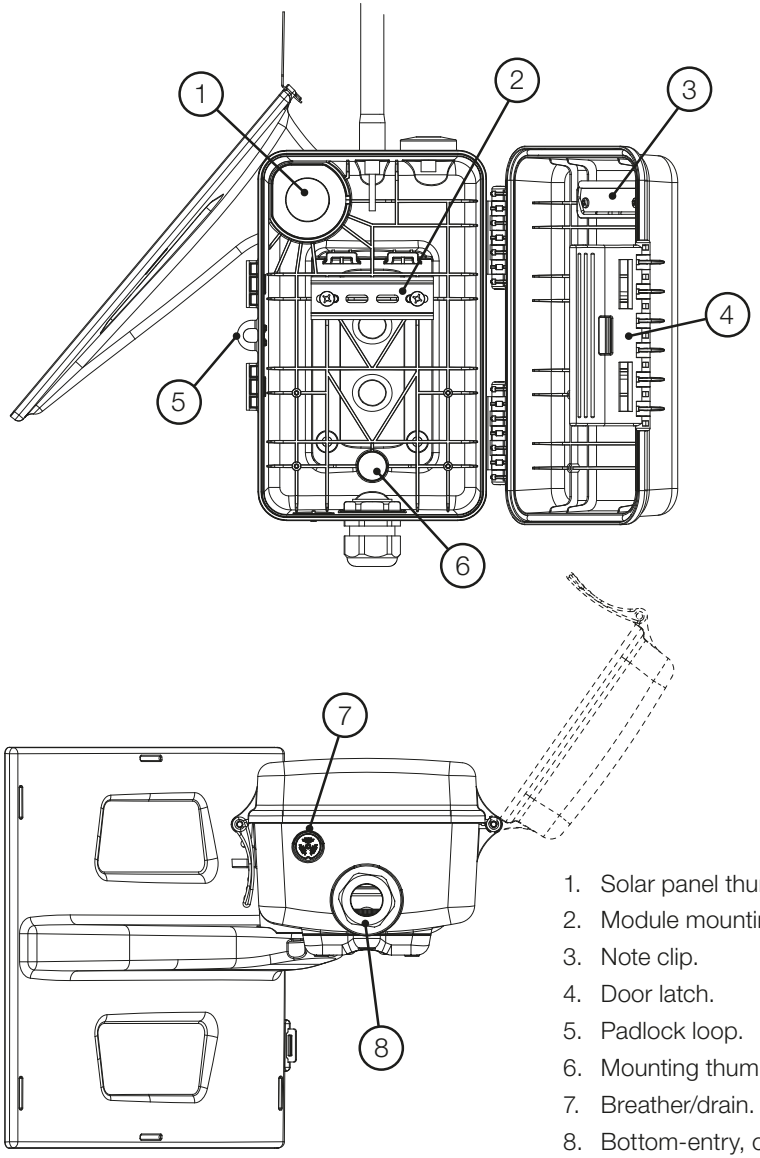

1. Solar panel thumb bolt.
2. Module mounting rail.
3. Note clip.
4. Door latch.
5. Padlock loop.
6. Mounting thumb bolt.
7. Breather/drain.
8. Bottom-entry, cable gland.

Figure 4. Solar Enclosure Inner Components

Electrical specifications

Power

- Nominal 14 W, 18 V, crystalline, PV, solar panel.
- Internally-routed, 2-core, solar-power cable with 4-way, pluggable connector compatible with C3 module.

RF antenna

- Primary antenna position for a variety of antenna options (see Product codes).
- Secondary antenna position with integrated, multi-band (900/xG, GPS), puck antenna.

Mechanical specifications

Enclosure

- Primary material: Glass re-enforced, UV stabilized, PET and poly-amide.
- IP rating: 56 (Pest-proof drainage vent, (Figure 4, Item 7)).

Dimensions

Module only:

	Imperial Units	Metric Units
Height	35.4"	900 mm
Width	16.5"	420 mm
Depth	12.9"	328 mm

Packaged for shipment:

	Imperial Units	Metric Units
Height	16.9"	430 mm
Width	17.3"	440 mm
Depth	13.0"	330 mm

Weight (including C3 module)

- Installed: 14.1 lb (6.4 kg).
- Packaged for shipment: 18.7 lb (8.5 kg).

Mounting

- Pole mount via hose clamps suitable for poles with diameters ranging from 1.5” nominal (48-90 mm actual) - (Figure 3, Item 2).
- Wall mount via four screw-holes.
- Easily removable from mounting bracket via single thumb-bolt (Figure 4, Item 6).
- Integrated, adjustable, solar-panel mount (Figure 4, Item 1).

Cable management

- Single, bottom-entry, M32 gland suitable for electrical conduit with diameters up to 1” (25 mm) - (Figure 4, Item 8).
- Two additional rear-entry locations may be drilled to accommodate pierce-through, cable glands.

Security

- Door lockable by padlock (not supplied).
- No externally accessible fasteners.

Product codes

Telemetry Modules

- C3-G [01060]: C3 with cellular connection.
- C3-U [10003]: C3 with UHF local radio (Australia only).
- C3-900 [10001]: C3 with 900Mhz local radio.
- C3-G900 [10002]: C3 with cellular connection and 900Mhz local radio.
- C3-GU [10004]: C3 with cellular connection and UHF local radio. (Australia only).
- C3-MA-L900 [10580]: C3 with cellular LTE-M/NB-IoT and 900MHz local radio.
- C3-M-LU [10583]: C3 module with cellular LTE-M/NB-IoT and UHF local radio. (Australia only).

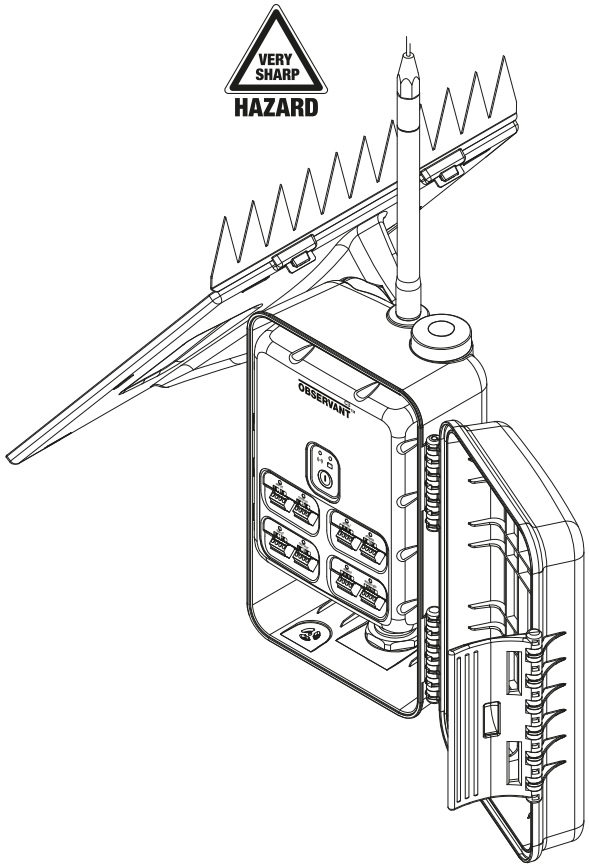

Figure 5. C3 Installed in Solar Enclosure

3. Installation

Preparation

Location

Care must be taken when selecting a site for the installation of a C3. For the solar panel to generate sufficient power (especially during winter), it should face true south (when north of the equator) or true north (when south of the equator) and have an unobstructed view of the sun throughout the day. To allow the radio communications to operate effectively, the C3 should also be situated away from large metal structures, like sheds and windmills. If such structures are unavoidable, best results are obtained when the C3 is mounted on the very top of the potential obstruction.

Mounting posts

A typical installation will involve the C3 mounted to a circular pole that has been driven (or concreted) securely into the earth. The C3 mount can accept pole diameters in the range of 1.5” to 3” nominal (48-90 mm, actual outside diameter). For installations requiring external antennas at considerable height, the C3 may be mounted at a convenient height while telescoping, square, tubing sections may be used to raise the antenna to the desired height.

Pre-cabling

It is prudent to consider the routing and protection of equipment cables prior to installation. Cable is best protected above the ground by the use of rigid electrical conduit (20 or 25 mm works best). This can also be used below ground in the absence of specially designed direct-burial cable (see Appendix A2 for more information). If the rear entry cable options are being used, cabling must be laid prior to the installation of the mounting post, extended up and through holes drilled in the post (via the pilot marks provided on the mounting bracket). Please see cable routing option 2 below for instructions.

Unpacking

The C3 packing box is designed to allow parts to be removed from the box in the order in which they are needed. By leaving parts in their box until they are used, there is less likelihood that they will become lost, damaged, or soiled during installation.

C3 Solar Enclosure installation

Mounting bracket

Mounting option 1: Pole mount

- Remove top packaging insert.
- Identify mounting bracket and hose-clamps.
- Un-fasten and tighten a hose clamp around the mounting pole.
- Mark the band approximately 15-20 mm [0.6”- 0.8”] past the worm-screw (Figure 6).

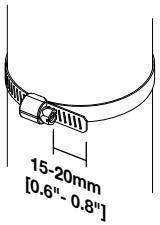

Figure 6. Ideal Hose Clamp length

- Trim the excess hose clamp band at this point using tin-snips or equivalent tool.
- Fix the mounting bracket to the pole using three hose clamps. The worm screws should be internal to the bracket (Figure 7, Item 2).

1. Mounting pole.
2. Hose-clamp (x3).
3. Rear cable entry pilot mark.

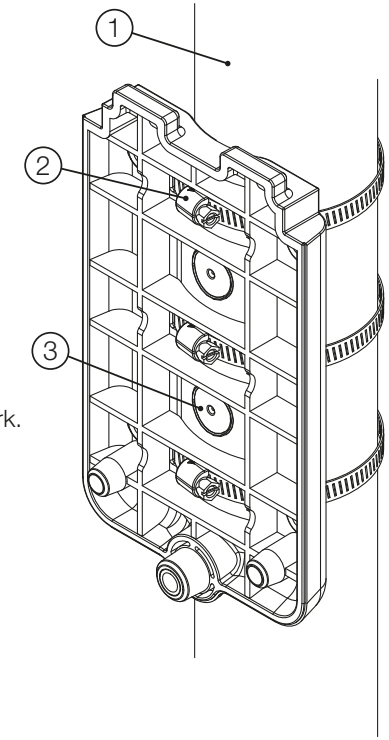

Figure 7. Installed Mounting Bracket

Mounting option 2: Wall mount

- Remove top packaging insert.
- Identify mounting bracket.
- Use four suitable screws to fix the mount securely to a wall stud (or similarly robust structure).

Cable routing option 1: Bottom entry

- Remove the Solar Enclosure from packaging and assemble to mount via tabs. The enclosure need not be held in place once on the mount (Figure 9, follow sequence 1-2).
- Extend the solar panel outward slightly and open the enclosure door.
- Remove the hardware pack.
- Place the enclosure on the mount (Figure 9) and secure using the small thumb bolt and washer supplied in the hardware pack (Figure 4, Item 6).
- Rotate the solar panel to the desired angle (see Appendix A3). Lock in place by tightening the large thumb screw (Figure 4, Item 1).
- Install the large, M32 cable gland (supplied in the hardware pack) into the bottom-entry hole with the seal on the outer surface of the enclosure. (Figure 4, Item 8).

Cable routing option 2: Rear entry

- Select a drill with a diameter sufficient to accommodate the cable.
- Drill one or both cable entry holes through mount/pole/wall using pilot marks in mount as a guide (Figure 7, Item 3).
- Feed equipment cables up pole and through holes made above.
- After pole has been secured, remove solar enclosure from packaging, extend solar panel outward slightly, open door, and remove hardware pack.
- Drill one or both cable entry holes in rear of solar enclosure using pilots marks and 16 mm drill or hole-saw (Figure 8, Item 2).
- Install the supplied pierce-through cable gland(s), flat side facing outward (Figure 8, Item 3).
- Feed cable through cable glands as the enclosure is being assembled to the mount.
- Use the small thumb bolt and washer to secure the enclosure to its mount.
- Place the enclosure on the mount (Figure 9), and secure using the small thumb bolt and washer supplied in the hardware pack (Figure 4, Item 6).
- Extend solar panel out to the desired angle (see appendix A3); lock in place by tightening large thumb screw (Figure 4, Item 1).
- Install the M32 plug (supplied in the hardware pack) into the bottom-entry hole, positioned with its seal on the outer surface of the enclosure.

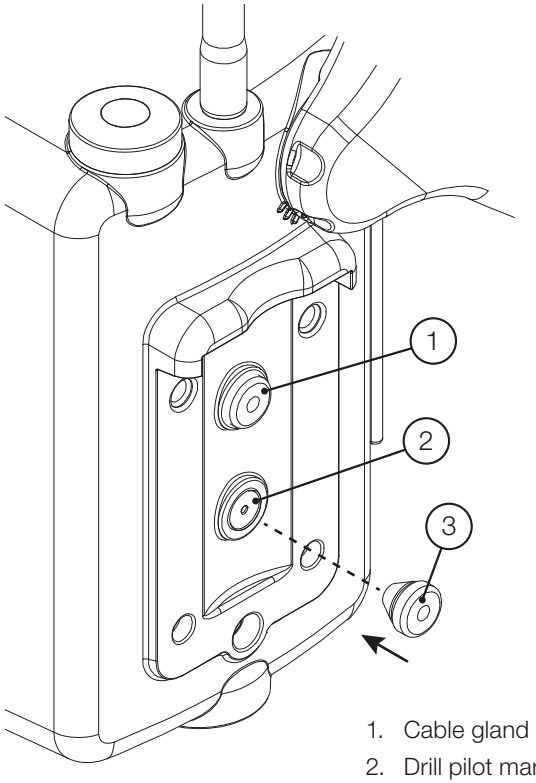

1. Cable gland in place.
2. Drill pilot mark.
3. Pierce through cable gland.

Figure 8. Optional Rear Entry Cable Glands

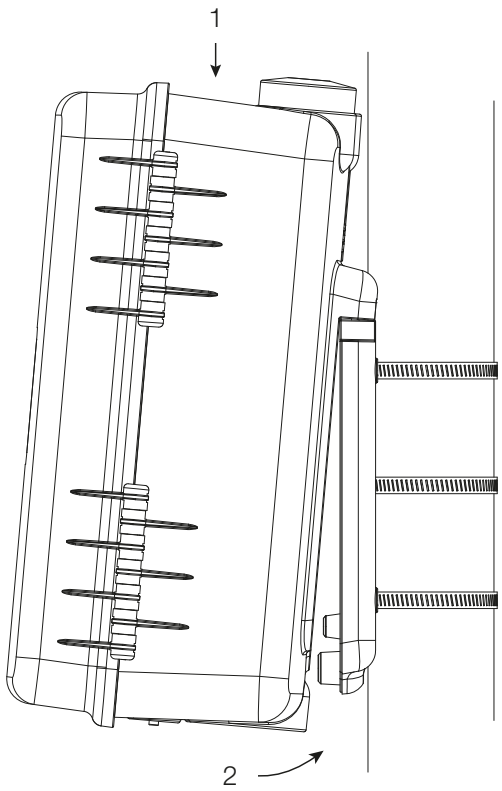

Figure 9. Installing Enclosure on Mounting Bracket

Primary antenna mounting

- Remove primary antenna base from packaging and remove its slotted nut.
- Feed antenna cable through antenna mounting hole; ensure O-ring seal is on the outside face of the enclosure (Figure 10).
- Secure with slotted nut; note the orientation of the nut should be so its shoulder is facing upward, allowing the nut to center itself on the hole.
- Tighten with appropriate-sized wrench.
- Feed primary antenna cable behind mounting rail (Figure 4, Item 2) along with secondary antenna cables.
- If no primary antenna is to be fitted, the mounting hole must be sealed with the provided M16, buttonhead plug.

1. Antenna base.
2. Enclosure cross-section.
3. O-ring.
4. Slotted nut (shoulder upward).
5. Antenna cable.

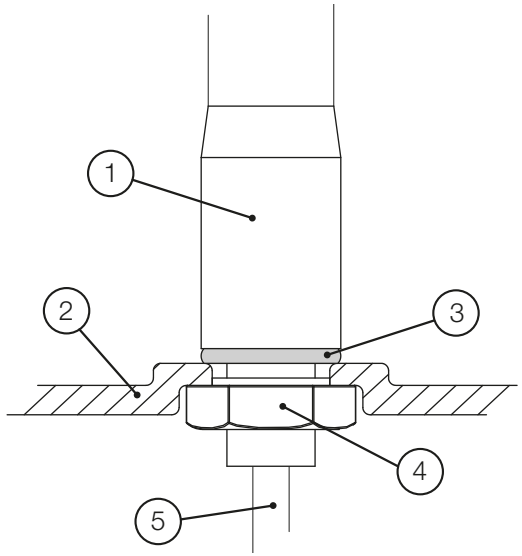

Figure 10. Primary Antenna Installation

C3 Module Installation

- Remove C3 module box from packaging.
- Remove C3 module from box; connect antenna cables as required according to Appendix A1.
- Mount inside Solar Enclosure via pull tab and DIN rail mount (Figure 11, proceed in order 1-2-3, hook over DIN rail at point A, clip at point B).
- Connect solar power cable to C3 module power terminal (Figure 1, Item 8).
- Turn on the C3 by momentarily pressing the touch button in the center of the unit. If the module's solar panel has been exposed to sunlight, it may have already turned on. (Figure 1, Item 3).
- The C3 module is now ready for connection to sensors. (See specific equipment information and wiring examples in appendix A6.).
- Installation notes, wiring diagrams, and other documents may be stored in the Solar Enclosure via the note clip on the rear of the door (Figure 4, Item 3).
- Cables may by secured with cable ties via the two tie points (Figure 1, Item 18).
- Remove bird deterrent from packaging (located below the box containing the C3 Module). Affix the deterrent to the top of the solar panel by sliding it into the two slots, as shown in Figure 12. Be cautious of the sharp edges.

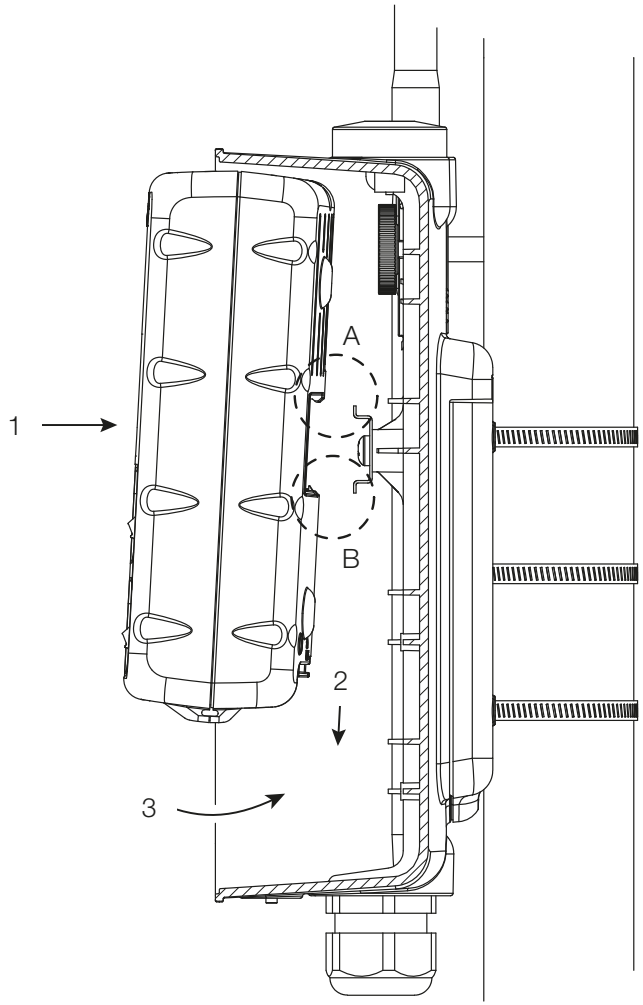

Figure 11. C3 Module Mounting

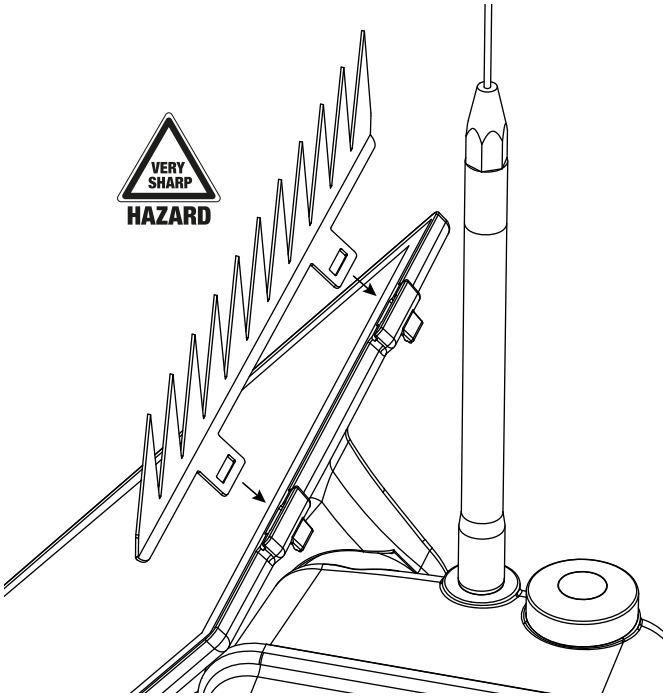

Figure 12. Bird Deterrent Mounting

4. Appendix

A1. Electrical connections

Equipment and power connections to the C3 module are made via 4-way, 0.15” (3.81 mm) pitch, pluggable, screw-terminal blocks, with the exception of the DC-power-input jack (typically used when supplying power via a wall transformer). RF antenna connections are made via SMA and BNC connectors. The following describes these connections and their relevant connector-pin assignments for each function.

Dual purpose digital/analog inputs (x4)

- Configurable, digital, sink or source (pull-up or pull-down) for connection to pulse-output flow meters, rain gauges, and other switching or voltage output devices.
- 5 V pull-up voltage (switchable).
- Tolerant up to 30 V.
- Frequency and pulse counting up to 1 kHz (@ 50% duty cycle).
- 0-10 V analog input mode with 10 kΩ input impedance, +/- 1% accuracy over full-scale range.

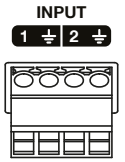

Label	Function
1	Input 1
⏚	Ground
2	Input 2
⏚	Ground

Table 1. Connections to Inputs 1 and 2 (Figure 1, Item 5)

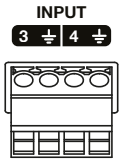

Label	Function
3	Input 3
⏚	Ground
4	Input 4
⏚	Ground

Table 2. Connections to Inputs 3 and 4 (Figure 1, Item 7)

Dual purpose switched outputs (x4)

- Nominal 12 V output for powering sensors, relays, etc.
- 600 mA current limit, automatic reset after 60 seconds.
- 20 V output, 4-20 mA current-sensor mode, +/- 1% accuracy over full-scale range.

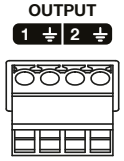

Label	Function
1	Output 1
⏚	Ground
2	Output 2
⏚	Ground

Table 3. Connections to Outputs 1 and 2 (Figure 1, Item 4)

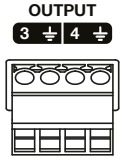

Label	Function
3	Output 3
⏚	Ground
4	Output 4
⏚	Ground

Table 4. Connections to Outputs 3 and 4 (Figure 1, Item 6)

RS232/SDI port

- 12 V, switched, sensor power-output with 600 mA limit.
- Configurable, true RS232 or SDI-12 line levels.
- Fault tolerant to 30 V.

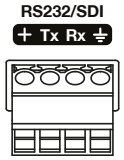

Label	Function
+	Sensor power
Tx	RS232 Tx
Rx	RS232 Rx / SDI12
⏚	Ground

Table 5. RS232/SDI12 Port Connections (Figure 1, Item 10)

RS485 ports (x2)

- 12 V, switched, sensor power-output with 600 mA limit.
- Standard, 2-wire RS485 for multi-drop connections.
- Fault tolerant to 30 V.

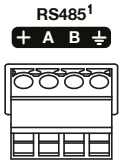

Label	Function
+	Sensor power
A	RS485 A (+)
B	RS485 B (-)
⏚	Ground

Table 6. RS485 Port 1 Connections (Figure 1, Item 9)

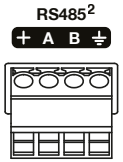

Label	Function
+	Sensor power
A	RS485 A (+)
B	RS485 B (-)
⏚	Ground

Table 7. RS485 Port 2 Connections (Figure 1, Item 11)

Power connections (x3)

- Operational up to 60 V.
- 40 W peak-total-power draw across all inputs.
- 100-500 mW, typical draw (depending on radio technology and mode).
- Power drawn from whichever power source has the highest voltage.

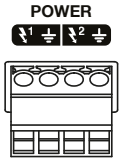

Label	Function
⚡1	Primary power (+)
⏚	Ground
⚡2	Secondary power (+)
⏚	Ground

Table 8. Power Terminal Connections (Figure 1, Item 8)

Terminal	Function
Center	DC power (+)
Outer	Ground

Table 9. DC Power-Jack Connections (Figure 1, Item 17)

USB port

- Standard USB 1.0, slave connection to PC.
- Configuration access.
- Type B (printer style) connector (Figure 1, Item 16).

SIM card

- Present on GSM/3G models.
- Standard, mini-SIM format (Figure 1, Item 13).
- Pinhole eject-button (Figure 1, Item 15).

RF antenna connections (x4)

- Connections available will depend on the specific configuration of the unit's radio technology.
- All connections employ standard polarity.

Connector	Type	Function
UHF (Figure 2, Item 5)	BNC	Long-range, UHF antenna (≈450-470 MHz) (Australia only.)
xG (Figure 2, Item 6)	SMA	Cell-based, packet-radio antenna (e.g., GSM or 3G)
900 (Figure 2, Item 7)	SMA	Short-range, spread-spectrum antenna (≈900 MHz)
GPS (Figure 2, Item 8)	SMA	Default GPS antenna

Table 10. RF Connections

A2. User interface reference

The C3 module makes use of a number of tricolor indicators to denote various states and modes of operation. There is also a Power/User touch button, a reset button, and an audio-feedback mechanism to assist in local configuration-and-control tasks.

Indicator keys

With the exception of the battery-status indicator, the C3 module must be in User Mode for the indicators to be actively showing state. This is a power conservation measure. User Mode can be activated by a short press of the Power/User button or, alternatively, if the C3 module is housed within the optional solar enclosure, User Mode will become active automatically when the door is opened. With no further activity, User Mode will deactivate after 10 minutes.

LED state	Description
Single green flash every 4 seconds	Battery healthy No external power Battery discharging
Double green flash every 4 seconds	Battery healthy External power present Charger on standby
Triple green flash every 4 seconds	Battery healthy Battery charging
Single amber flash every 4 seconds	Battery low No external power Battery discharging
Triple amber flash every 4 seconds	Battery low Battery charging
Single red flash every 4 seconds	Battery critical No external power Battery discharging
Triple red flash every 4 seconds	Battery critical Battery charging
Off	Unit power off

Table 11. Battery Status Indicator (Figure 1, Item 1)

State	Indication
Off	Off
Starting - not registered	2 Amber
Starting - registered	1 Amber
Connected - no incoming comms	1 Green
Connected - seen incoming comms	2 Green
Fault	2 Red

Table 12. Radio Indicator LED (Figure 1, Item 2)

LED state	Description
Solid green	Input active
Flashing green (2 Hz)	Input pulsing
Off	No input active, or User Mode inactive

Table 13. Input Port Indicators (Figure 1, Items 5 and 7)

LED state	Description
Solid green	Output active
Flashing red (2 Hz)	Output overload, inactive
Off	No output active, or User Mode inactive

Table 14. Output Port Indicators (Figure 1, Items 4 and 6)

LED state	Description
Solid green	Sensor power active
Continuous red flash (2 Hz)	Sensor power overload, latched off
Momentary green flash	Serial communications transmit
Momentary amber flash	Awaiting response
Momentary flashing red	Serial communications response error
Momentary solid red	No serial communications response
Off	No serial communications active, or User Mode inactive

Table 15. RS485 and RS232 Port Indicators (Figure 1, Items 9, 10 and 11)

LED state	Description
Momentary green flash	Communications transmit
Momentary amber flash	Awaiting response
Momentary flashing red	Communications response error
Momentary solid red	No communications response
Solid amber	USB plugged in but not active
Solid green	USB connection active
Off	No USB communications, or User Mode inactive

Table 16. USB Port Indicator (Figure 1, Item 16)

LED state	Description
Single green flash every 4 seconds	Voltage above 2 V present
Double green flash every 4 seconds	Voltage above 10 V present
Triple green flash every 4 seconds	Voltage above 20 V present
Off	No power present, or User Mode inactive

Table 17. Power Port and DC-Jack Indicator (Figure 1, Item 8; Figure 1, Item 17)

Power/User touch button

The touch-button input (Figure 1, Item 3) serves multiple purposes. These depend upon the current state of the C3 and are as follows:

- If the C3 is off, a momentary press will power the C3 up.
- If the C3 is on, but not in User Mode, a momentary press will activate User Mode (signified by an ascending series of beeps).
- If the C3 is on, a momentary press will send a 'User Visit' event via the connected radio.
- To power down the unit, press the button once momentarily, then immediately press and hold the button until the long continuous beeps stops. If external power is present, the C3 will restart once the button has been released. Otherwise, the C3 will remain powered down until either the touch button is pressed again or an external power source is connected.
- Activation of the touch button is immediately signified by a short beep and the display of green radio and battery LEDs (Figure 1, Items 1 and 2).
- Some devices connected to the C3 may make use of the User button for purposes other than those described above. For more information, consult the documentation of the device in question.

Pinhole reset button

The reset button (Figure 1, Item 12) is used primarily for re-programming and clearing of the C3's memory under the guidance of Observant technical support. It should not be used in normal operations or during installation or maintenance.

A3. Solar Enclosure panel orientation

The solar panel panel, integrated with the C3 Solar Enclosure, can be set to one of three angles (30, 40, and 50 degrees as measured from horizontal). The panel can only fully lock into place when seated at one of these angles. An indication of the position can be seen by the index marks on the rear of the enclosure (Figure 13). The angle should be set to optimize solar exposure during the winter months. A guide for a given latitude (South or North) is to set the angle to:

- 30° when in latitudes between 0° and 30°.
- 40° when in latitudes between 20° and 30°.
- 50° when in latitudes greater than 30°.

Note that in the southern hemisphere the enclosure must be oriented with the panel facing true north. In the northern hemisphere, the panel must face true south. Note that true heading and magnetic heading always differ according to the magnetic declination of the local area.

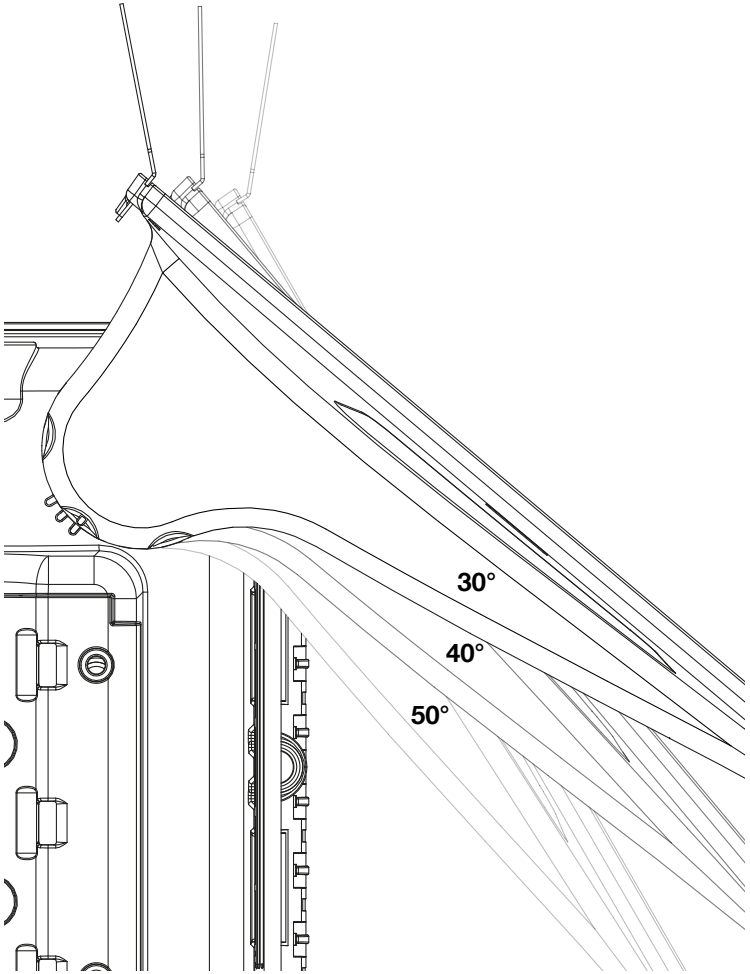

Figure 13. Solar Panel Angle Setting

A4. Physical dimensions

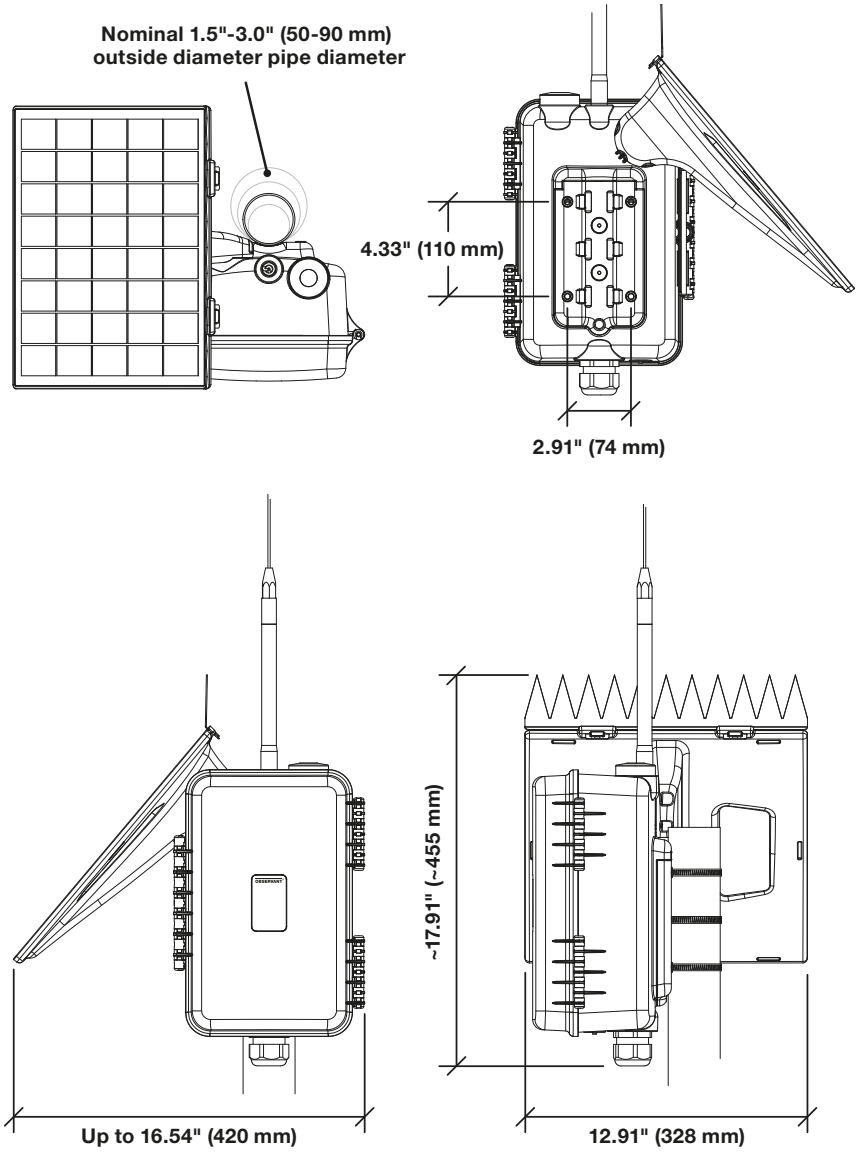

Figure 14. Dimensions of Mounted Solar Enclosure

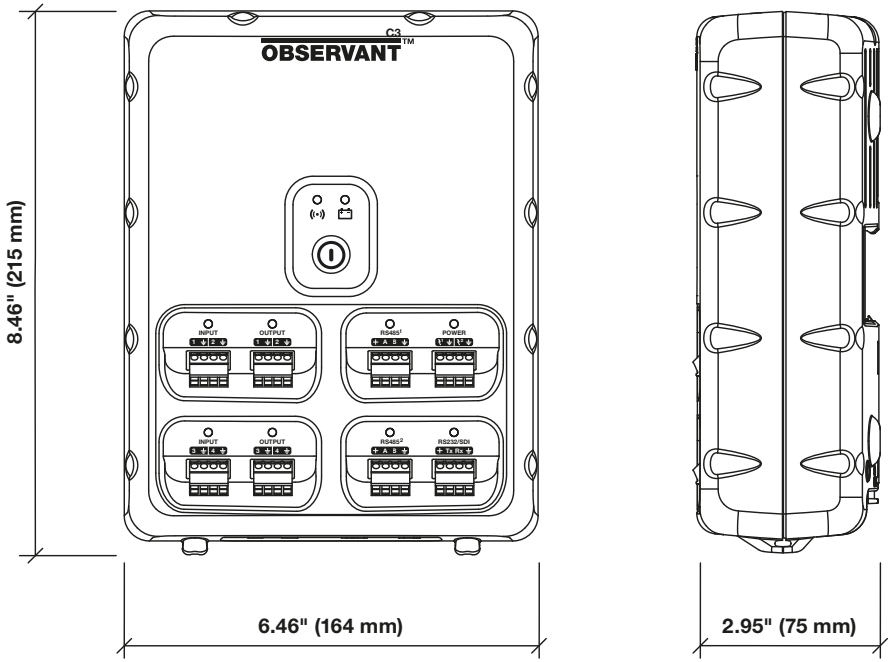

Figure 15. C3 Dimensions

Revisions

OBS-USR-M001-C3 User Guide

R1: Initial release September 2012

(AJK) R2: February 2013 (AJK)

- Added IP ratings, design life and product codes to module and solar enclosure info.
- Added further rear cable entry information.
- Added A7 and A8 (as numbered in R2) - Supported devices, typical scenarios.
- Deleted “list of figures”.
- Added 3rd level headings to TOC.

R3: April 2013 (AJK)

- Correction of LINAK wiring diagram cable colours P61.
- Units text spacing consistency.
- Correction of solar power connection reference P25.

R4: November 2013 (AJK)

- Correction of Senix wiring diagram cable colours P58.
- Correction of TOC page numbering out by 2.

R5: June 2014 (BN)

- Removed generic content.

R6: July 2015 (LP & JY)

- General content edits throughout.
- Localization.
- Update of units of measurement.
- Addition of Observant Global signup instructions.

R7: June 2021 (SBA)

- Added LTE-M/NB-IoT updates.

Designed in Australia

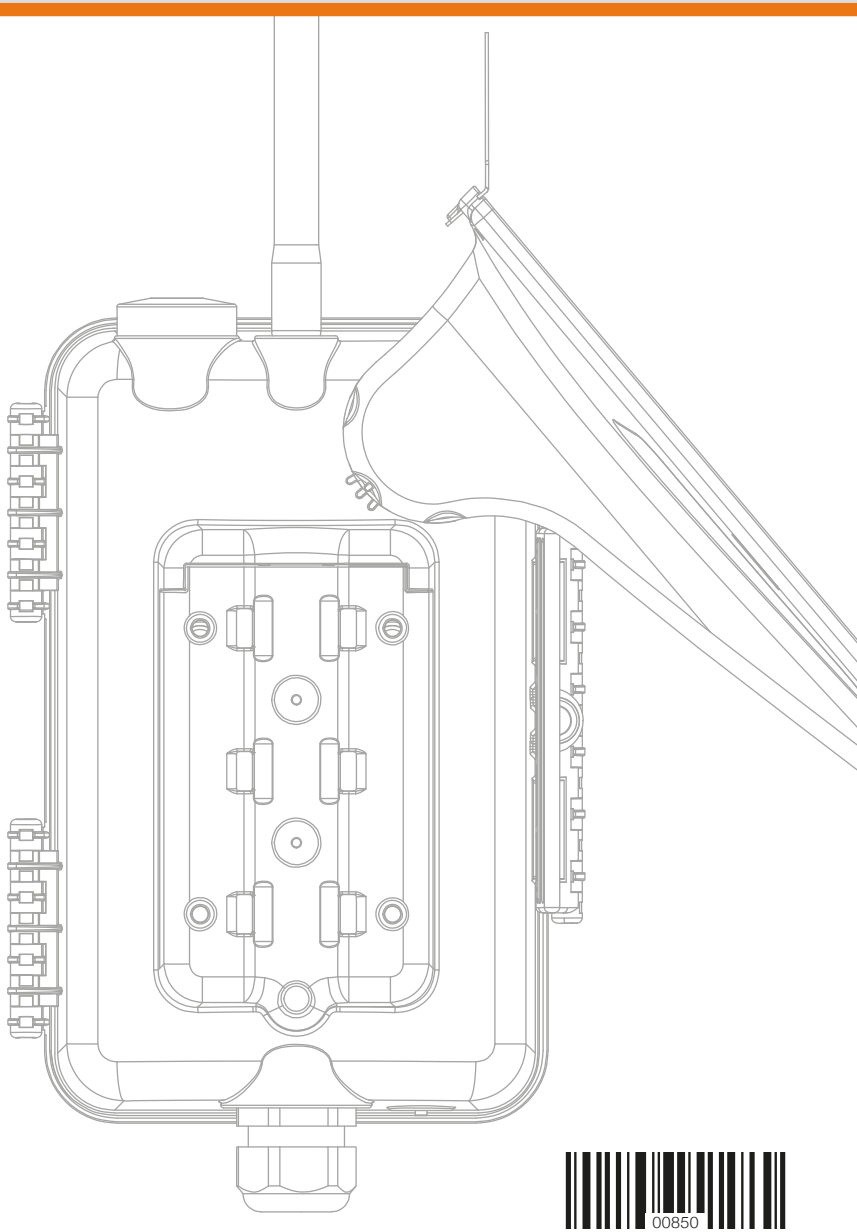

OBS-USR-M001 R7

00850

observant.net